A-PDF Image To PDF Demo. Purchase from www.A-PDF.com to remove the watermark

Nintendo®

DISTRIBUTED FOR NINTENDO BY MATTEL

Printed in Japan

GBR

GYROMITE™

INSTRUCTION BOOKLET

Look for this seal on all software and accessories for your Nintendo Entertainment System. It represents Nintendo's commitment to bringing you only the highest quality products. Items not carrying this seal have not been approved by Nintendo, and do not meet our standards of excellence in workmanship, reliability and most of all, entertainment value.

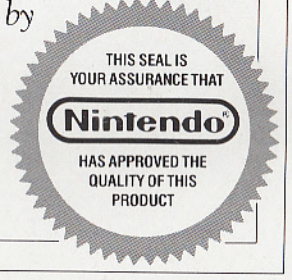

DISTRIBUTED FOR NINTENDO BY
*MATTEL U.K. LIMITED,
MERIDIAN WEST, LEICESTER, LE3 2WT
*MATTEL PTY. LIMITED AUSTRALIA
461 PLUMMER STREET,
PORT MELBOURNE, VICTORIA, 3207

Note: Conditions of warranty vary depending upon country.
Please refer to the appropriate warranty at the end of this booklet.

INTRODUCTION

Thank you for selecting the Nintendo® Entertainment System™ Gyromite™ Pak. This game requires R.O.B.™, your Robotic Operating Buddy.

OBJECT OF THE GAME/GAME DESCRIPTION

In this action-packed game you've got to keep R.O.B.'s gyroscope spinning in order to assist Professor Hector, the mad scientist, in defusing all the bombs in his laboratory. R.O.B. will help move the columns blocking the scientist's way so he can get to the dynamite before it explodes. Master the technique and you can get R.O.B. spinning two gyros at the same time. But don't take your eyes off the screen for too long — because anything can happen in Gyromite!

Please read this Instruction Booklet to ensure proper handling of your new game, and then save it for future reference.

CAUTION: Misuse or mishandling of spinning gyro can cause physical injury. Read this Instruction Booklet for proper and safe use of gyro and gyro spinner BEFORE operating R.O.B.'s accessories.

Please follow instructions in the NES Instruction Manual to properly set up your NES and R.O.B.

© 1987 Nintendo

SETTING UP FOR GYROMITE GAME PLAY

1. Turn on the power switch on R.O.B.'s main body. R.O.B. should start automatically and stop in the standby position (arms open, body at the top of the center shaft with arms facing forward).
   * If R.O.B. does not assume the standby position, switch the power off and switch it on again.
   * Please note that R.O.B. will not move when his batteries are run down.

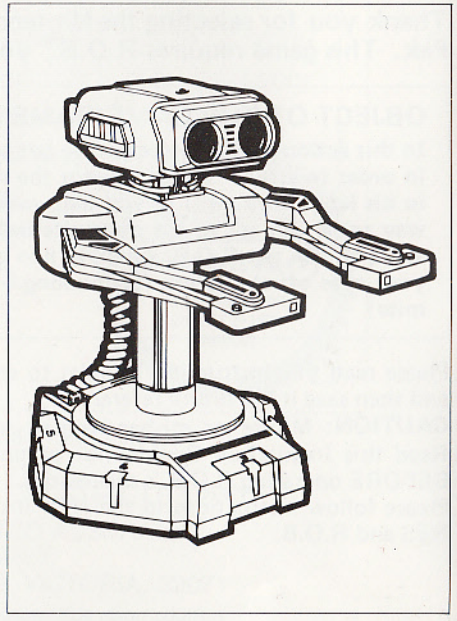

2. Names of R.O.B.'s parts and attachments:

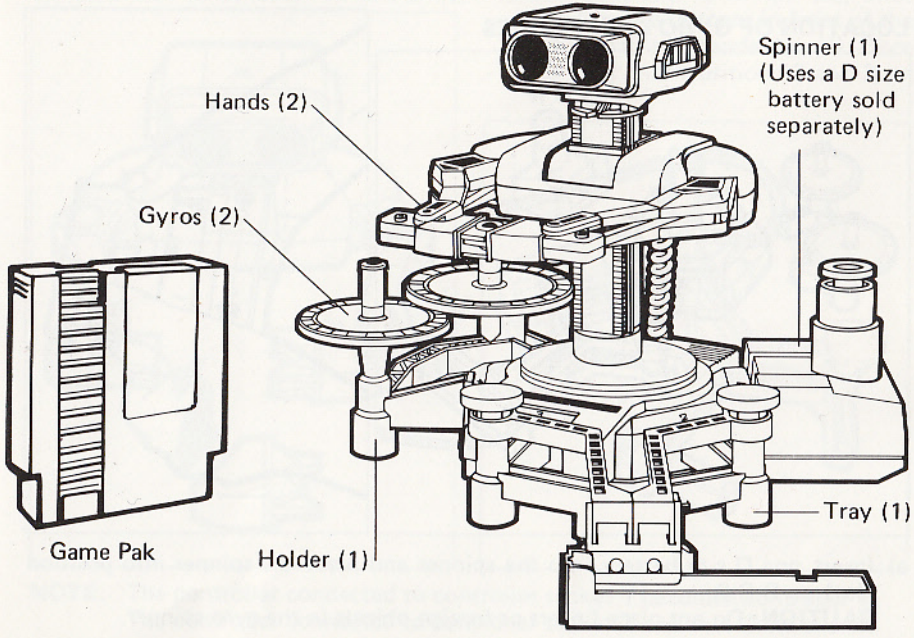

3. Set Up of R.O.B.'s Accessories for Gyromite

LOCATION OF GYRO ACCESSORIES

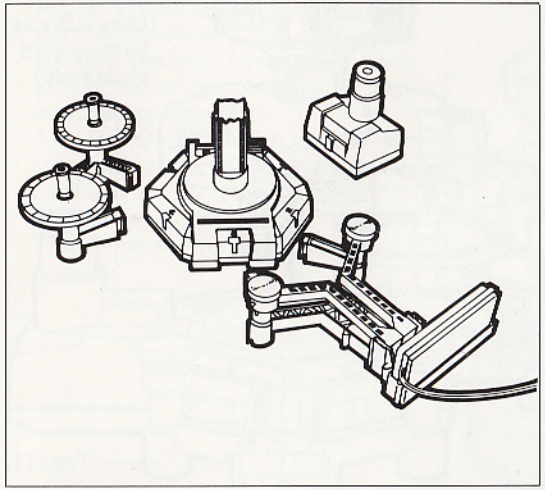

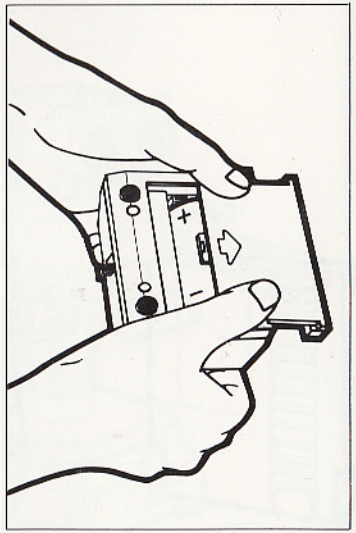

a) Insert one D size battery into the spinner and place the spinner into position No.1 on R.O.B.
CAUTION: Do not place fingers or foreign objects in the gyro spinner.

b) Attach the hands (2) to R.O.B.'s arms.

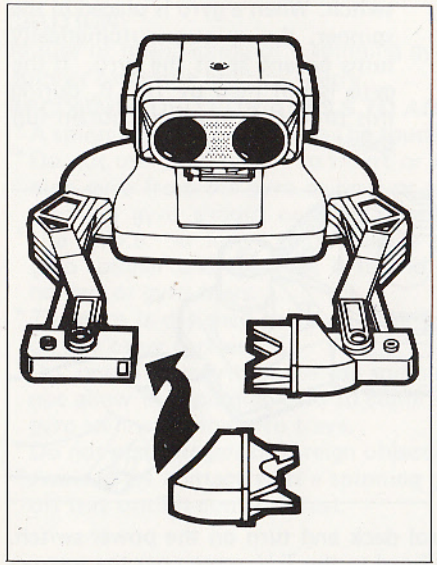

c) Set Controller 2 in the tray with the A and B Buttons in front of the actuators (not upside down!). Place the tray into positions 2 and 3 on R.O.B.

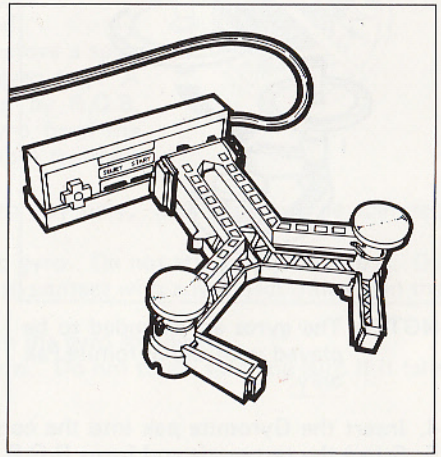

NOTE: The controller connected to controller socket 1 becomes Controller 1.
The controller connected to controller socket 2 becomes Controller 2.

d) Set the gyros (2) in the holder. Place the holder into positions 4 and 5 on R.O.B.

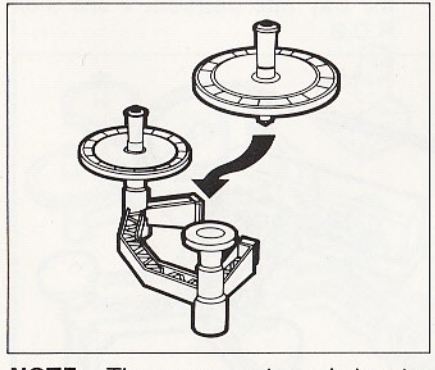

NOTE: The gyros are intended to be played with the Gyromite Pak only.

e) Turn on the gyro spinner's power switch. When a gyro is placed in the spinner, the spinner automatically turns on and spins the gyro. If the gyro is not held by R.O.B. during this process, it may not obtain full speed.

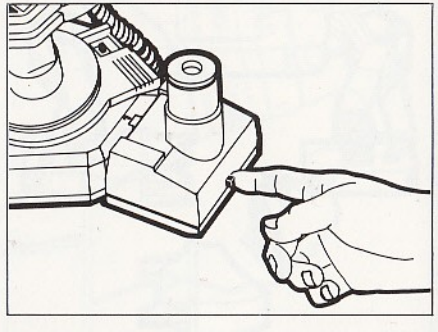

4. Insert the Gyromite pak into the control deck and turn on the power switch.
5. Select the test mode and focus R.O.B.'s head to the T.V. screen per the instructions in the NES Instruction Manual. R.O.B. IS NOW READY TO PLAY GYROMITE!

CAUTIONS

CAUTION:

Misuse or mishandling of a spinning gyro or the gyro spinner can cause physical injury.

RECOMMENDED FOR AGES 8 TO ADULT.

* A spinning gyro should never be touched.
* Do not use your fingers to insert or remove a spinning gyro from the gyro spinner or a gyro tray. A spinning gyro should only be handled by R.O.B.
* Use R.O.B. to insert or remove a gyro from the gyro spinner and to move it to and from the gyro holders or gyro trays.
* The gyro is designed to spin in the gyro tray only. It should never be operated on any other surface.
* Do not place anything on the spinning gyro. Do not attach anything to it. Do not allow the spinning gyro to come into contact with any object other than the gyro spinner or the gyro trays.
* Do not place fingers or foreign objects in the gyro spinner.
* Avoid close contact with a spinning gyro. Do not touch spinning gyro if it falls off tray until it comes to rest.

CONTROLS

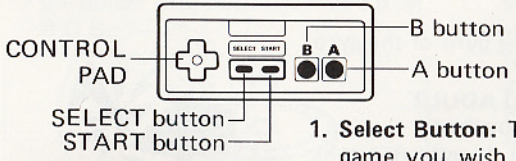

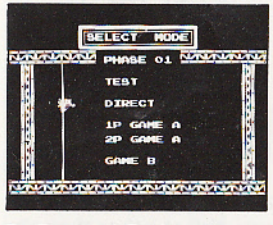

1. **Select Button:** This button is used to select which game you wish to play while in the select mode menu. During the test or the direct mode, pressing the select button will return you to the select mode menu.
2. **Start Button:** After selecting the desired game mode use the start button to start the game. The start button also changes the screen to blue to control R.O.B. or to black to control Professor Hector and Professor Vector during Game A.
3. **Control Pad:** The control pad has two functions. It can control R.O.B. (blue screen in Game A, black screen in Game B) or Professors Hector and Vector (black screen in Game A).
4. **A Button:** This button is used to open R.O.B.'s arms (blue screen in Game A, black screen in Game B) and pick up or put down turnips (in black screen Game A).
5. **B Button:** This button is used to close R.O.B.'s arms (blue screen in Game A, black screen in Game B) and pick up or put down turnips (black screen in Game A).

GAME MENU AND GAME PLAY

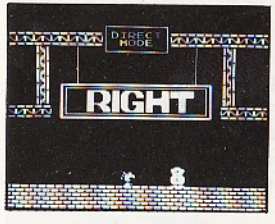

1. **Test mode** – This is used to focus R.O.B.'s eyes onto the T.V. screen. (See NES Instruction Manual)
2. **Direct** – This game helps you get accustomed to moving gyros with R.O.B. Your commands go straight to the T.V. screen which sends signals to R.O.B.

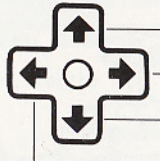

Up : Raises the arms.
Right : Turns the arms to the right.
Down: Lowers the arms.
Left : Turns the arms to the left.

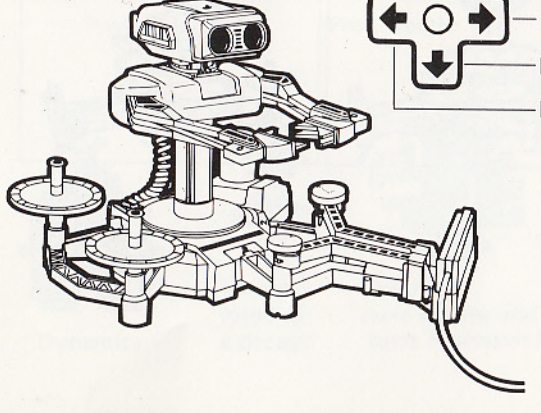

* A button: Opens the arms.
* B button: Closes the arms.

R.O.B. makes three kinds of movement:

1) Grasps and releases objects.
2) Raises and lowers objects.
3) Turns and carries objects to the left and right.

A gyro set in motion by the spinner will not fall as long as it is rotating — even after it is relocated to the tray. You can then move the other gyro after the first one is set spinning on the tray. Practice the commands one after the other so you can get used to operating R.O.B. Skillfully moving the gyros will be helpful when you play Game A or B. Press the select button to return to the select mode menu.

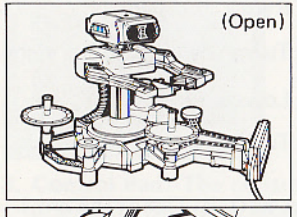

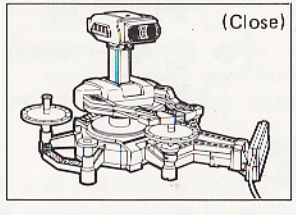

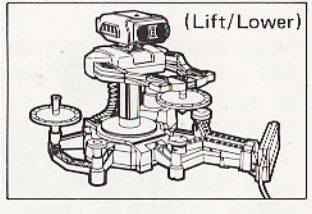

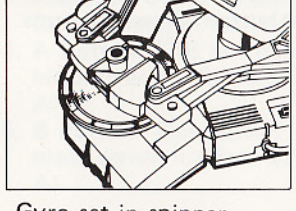

Gyro set in spinner

3. GAME A — 1 Player

Characters

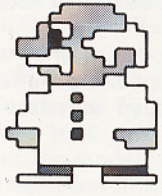

Prof. Hector

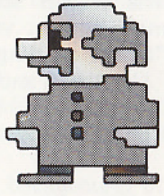

Prof. Vector

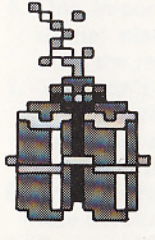

Dynamite

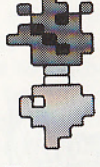

Turnip (used as a decoy)

Smick (eats turnips and bites Professors)

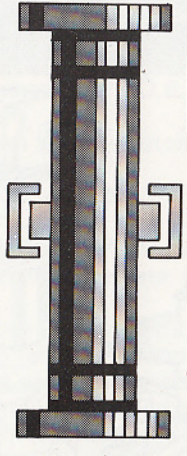

Gate (Red)

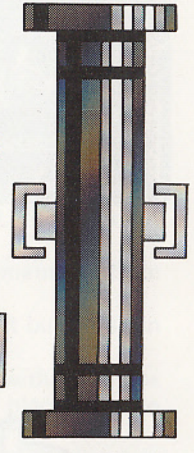

Gate (Blue)

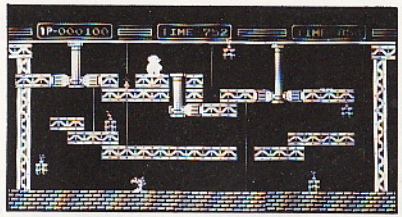

This is an exciting game in which the Professor and R.O.B. cooperate to remove all the dynamite and prevent a big explosion. The screen scrolls sideways to expose more bombs.

* There are 40 phases for this game mode. Use the A and B buttons while the select mode menu is displayed to select the phase you want.

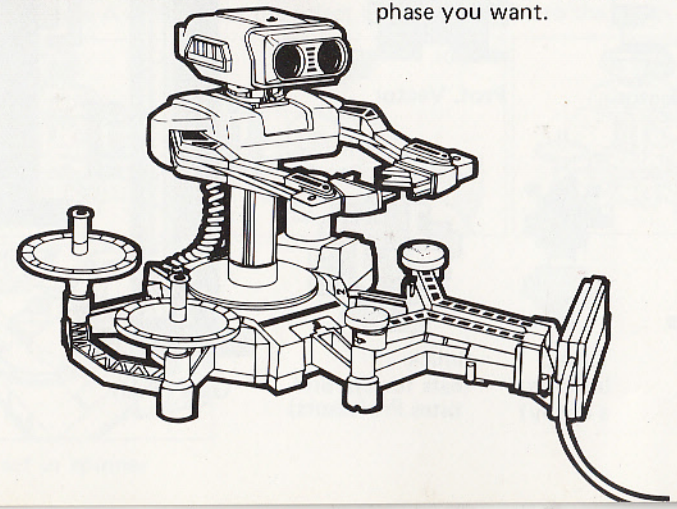

GAME PLAY

1. The Professor has to move past a spot where dynamite is laid in order to remove it. He must remove all dynamite in the time given. By using R.O.B. and the gyros, you can help him by raising and lowering the blue and red gates that block the Professor's way.
2. So long as the background of the screen is black, you operate the Professor with Controller 1.
3. To control R.O.B., press the start button and the background of the screen turns blue, meaning that Controller 1 sends commands to R.O.B. (Robot transmission mode).
4. After transmitting, the background of the screen changes automatically from blue to black and control goes back to the Professor.
5. If you want to send another command to R.O.B., press the start button again and then press the necessary command button.
6. One important thing to remember when raising/lowering gates with the gyros is that placing a gyro onto the blue tray lowers the blue gate; placing a gyro onto the red tray lowers the red gate.
7. You don't have to bother spinning a gyro to move only one gate up and down, but sometimes both gates have to be opened to let the Professor pass. In this case, spin one gyro with the spinner and place it on either the blue or red tray, then R.O.B.'s hands will be free to put the other gyro on the other tray.
8. Smicks, the killer bugs, are lying in wait somewhere on the screen and you will lose the Professor if he is bitten by a Smick.
9. Smicks like to bite Professors; but even more than Professors, they like turnips. If you offer a greedy Smick a turnip, his favorite food, he won't attack the

Professor.

10. Use the A button on Controller 1 to make the Professor pick up and put down the turnip.
11. Move the gate up and down to crush the Smicks and gain 500 points.
12. There are 6 bundles of dynamite (some of which might be hidden and invisible) per phase. Every bundle of dynamite removed gives you 100 points.
13. The time remaining after all the dynamite has been picked up will be added to your score as extra points.
14. The Professor disappears if he is bitten by a Smick or if the time is used up. The game ends when all three Professors have disappeared.
15. To pause during the game, press the select button during play. During pause you can view the entire scene by pushing the ✥ control pad. Press the select button again to release the pause.
    * If the start button is pressed during pause, the screen will return to select mode list and the game will end.

4. GAME A – 2 Player

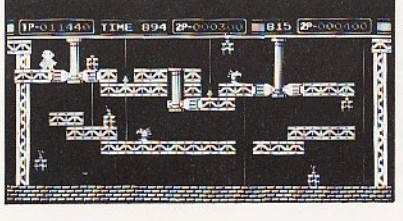

In Game A (for 2 players), Professor Vector also appears. Take turns using Controller 1. Otherwise, the game is the same as the 1 player game.

5. GAME B

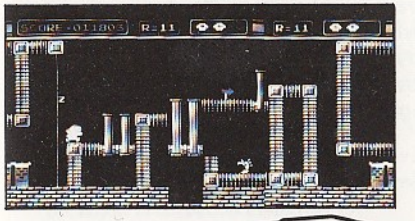

Here Professor Hector is walking in his sleep. Move the gates up and down with R.O.B. and the gyros to prevent the Professor from being bitten by a Smick. Try to help the Professor pass through smoothly.

* There are 25 phases, starting from R=01 (Phase 1).

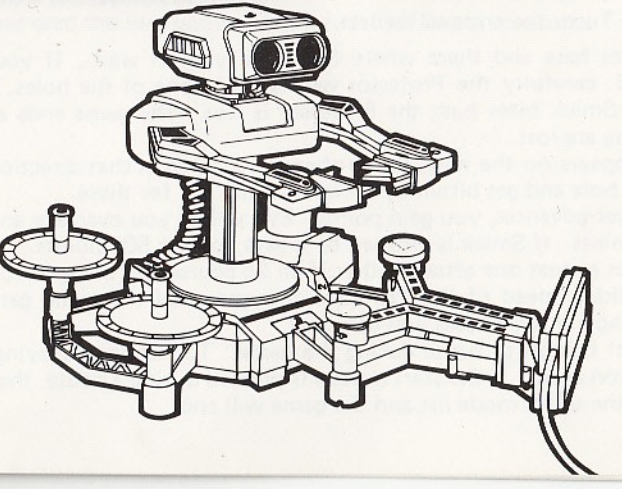

1. The Professor comes out of the tunnel on the left and walks determinedly to the right. When he passes a rope, he always climbs up to the top and jumps down to the right. If a gate is closed, he will just keep walking in place.
2. In this game, R.O.B. is operated directly by Controller 1.
3. Operate R.O.B. to position gyros and move the gates up and down. Lead the Professor safely to the tunnel on the far right.

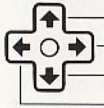

* A button: Opens the arms.
* B button: Closes the arms.

4. There are holes here and there where Smick is lying in wait. If you don't operate R.O.B. carefully the Professor will fall into one of the holes. If this happens, and Smick bites him, the Professor is lost. The game ends after all three Professors are lost.
5. If an arrow appears on the way, the Professor has to go in that direction or he will fall into a hole and get bitten by Smick. Watch out for these.
6. As the Professor advances, you gain points. Every time you overtake an arrow, you get 100 points. If Smick is crushed by a gate you get 500 points.
7. Various courses appear one after another. If all 25 courses are completed successfully, the walking speed of the Professor increases and the game gets more difficult. See how many phases you can clear.
8. Press the select button to pause during the game. To continue playing, press the select button again. If the start button is pressed during a pause, the screen will return to the select mode list and the game will end.

PRECAUTIONS

1) This is a high precision game. Do not put it in places that are very hot or cold. Never hit or drop it. Do not take it apart.
2) Do not touch the connectors or get them wet or dirty. Doing so may damage the game.
3) Do not clean with benzene, paint thinner, alcohol or other solvents.
4) Play the game from a normal viewing distance from the TV screen.
5) For your health, take 10 ~ 15 minute breaks every 2 hours when playing for an extended period of time.
6) Please read the instruction booklet for the Robot carefully.

MEMO

MEMO

90-DAY LIMITED WARRANTY NES GAME PAK BY MATTEL U.K. LIMITED

90-DAY LIMITED WARRANTY

Mattel U.K. Limited ("Mattel") warrants to the original consumer/purchaser that this NES Game Pak ("PAK") (not including Game Pak Accessories and Robot Accessories) shall be free from defects in material and workmanship for a period of 90 days from the date of purchase. If a defect covered by this warranty occurs during this 90-day warranty period, Mattel will repair or replace the PAK at its option, free of charge.

To claim under this warranty you should return the product either to the shop at which it was purchased or the address below. Returns to the NES Service Department should be sent carriage prepaid and insured for loss or damage, together with your sales receipt or similar proof of purchase to;

NES Service Department
Hi-Tech Electronic Services Ltd.
Unit 2B
200 Rickmansworth Rd
Watford
Herts WD1 7JS
TEL: (0923) 41811

(BE SURE TO INCLUDE YOUR NAME, ADDRESS, PHONE NUMBER, SALES RECEIPT, PLUS A BRIEF DESCRIPTION OF THE FAULT.)

In the event of any problem phone the NES Service Department by calling (0923) 41811 (8:00 a.m. to 4:00 p.m., Monday to Friday).

You may be charged for repairs arising from defects not covered by this guarantee (see below). This guarantee is only valid if the product was purchased in the United Kingdom or Eire.

This warranty shall not apply if the PAK has been damaged by negligence, accident, unreasonable use, modification, tampering, or by other causes unrelated to defective materials or workmanship.

This warranty/guarantee is in addition to and does not diminish your statutory or legal rights.

SERVICE AFTER EXPIRATION OF WARRANTY

If the Pak develops a problem after the 90-day warranty period, you may contact the NES Service Department at the phone number noted above. If the NES Service Technician is unable to solve the problem by phone, simply return the defective Pak, freight prepaid and insured for loss or damage, to the NES Service Department at the above address, enclosing a cheque or money order for £10.00, payable to Hi-Tech Electronic Services.

Mattel will, at its option, subject to conditions above, repair the Pak or replace it with a new or repaired Pak. If replacement Paks are not available, the defective Pak will be returned and the £10.00 payment refunded.

WARRANTIES LIMITATIONS

ANY APPLICABLE IMPLIED WARRANTIES, INCLUDING WARRANTIES OF MERCHANTABILITY AND FITNESS FOR A PARTICULAR PURPOSE, ARE HEREBY LIMITED TO 90 DAYS FROM THE DATE OF PURCHASE AND ARE SUBJECT TO THE CONDITIONS SET FORTH HEREIN. IN NO EVENT SHALL MATTEL BE LIABLE FOR CONSEQUENTIAL OR INCIDENTAL DAMAGES RESULTING FROM THE BREACH OF ANY EXPRESS OR IMPLIED WARRANTIES.

90-DAY LIMITED WARRANTY NES GAME PAK BY MATTEL PTY. LIMITED

90-DAY LIMITED WARRANTY

Mattel Pty. Limited ("Mattel") warrants to the original consumer/purchaser that this NES Game Pak ("PAK") (not including Game Pak Accessories and Robot Accessories) shall be free from defects in material and workmanship for a period of 90 days from the date of purchase. If a defect covered by this warranty occurs during this 90-day warranty period, Mattel will repair or replace the PAK at its option, free of charge.

To receive this warranty service,
contact Mattel Pty. Limited
(nearest state office)

This warranty shall not apply if the PAK has been damaged by negligence, accident, unreasonable use, modification, tampering, or by other causes unrelated to defective materials or workmanship.

WARRANTIES LIMITATIONS

ANY APPLICABLE IMPLIED WARRANTIES, INCLUDING WARRANTIES OF MERCHANTABILITY AND FITNESS FOR A PARTICULAR PURPOSE, ARE HEREBY LIMITED TO 90 DAYS FROM THE DATE OF PURCHASE AND ARE SUBJECT TO THE CONDITIONS SET FORTH HEREIN. IN NO EVENT SHALL MATTEL BE LIABLE FOR CONSEQUENTIAL OR INCIDENTAL DAMAGES RESULTING FROM THE BREACH OF ANY EXPRESS OR IMPLIED WARRANTIES.

The provisions of this warranty are valid in Australia only. Some states do not allow limitations on how long an implied warranty lasts or exclusion of consequential or incidental damages, so the above limitation or exclusion may not apply to you. This warranty gives you specific legal rights, and you may also have other rights which vary from state to state.